# CYW9BTM2BASE1
# INFINEON M.2 BT/BLE BASEBOARD

## CONTENTS


| PAGE | DESCRIPTION |
|---|---|
| 01 | Title Page |
| 02 | Block Diagram |
| 03 | PMU Block Diagram |
| 04 | M.2 & Arduino Interface |
| 05 | Peripherals |
| 06 | USB Power |
| 07 | PSoC 5LP |
| 08 | HCI UART and PUART Level Translators |
| 09 | BT USB Connector, AIROC Headers and Accessories |
| 10 | GPIOs Mapping and Configuration |
| 11 | Revision History |


## Drawing Numbers

| | |
|---|---|
| PCBA | 121-90706-01 |
| PCB | 600-90706-01 |
| FAB DRW | 610-90706-01 |
| ASSY DRW | 620-90706-01 |
| SCH DRW | 630-90706-01 |


**Legal Disclaimer :**
The information given in this document shall in no event be regarded as a guarantee of conditions or characteristics. With respect to any examples or hints given herein, any typical values stated herein and/or any information regarding the application of the device, Infineon Technologies hereby disclaims any and all warranties and liabilities of any kind, including without limitation, warranties of non-infringement of intellectual property rights of any third party.


SCH Title : CYW9BTM2BASE2

Page Title: Title Page

| Size | Document Number | Drawn By | Approved By | Rev |
|---|---|---|---|---|
| A4 | 630-90706-01 | Michael Liu | Charles Leung | 2.0 |

Date: Friday, July 15, 2022 Sheet 1 of 11

# Block Diagram

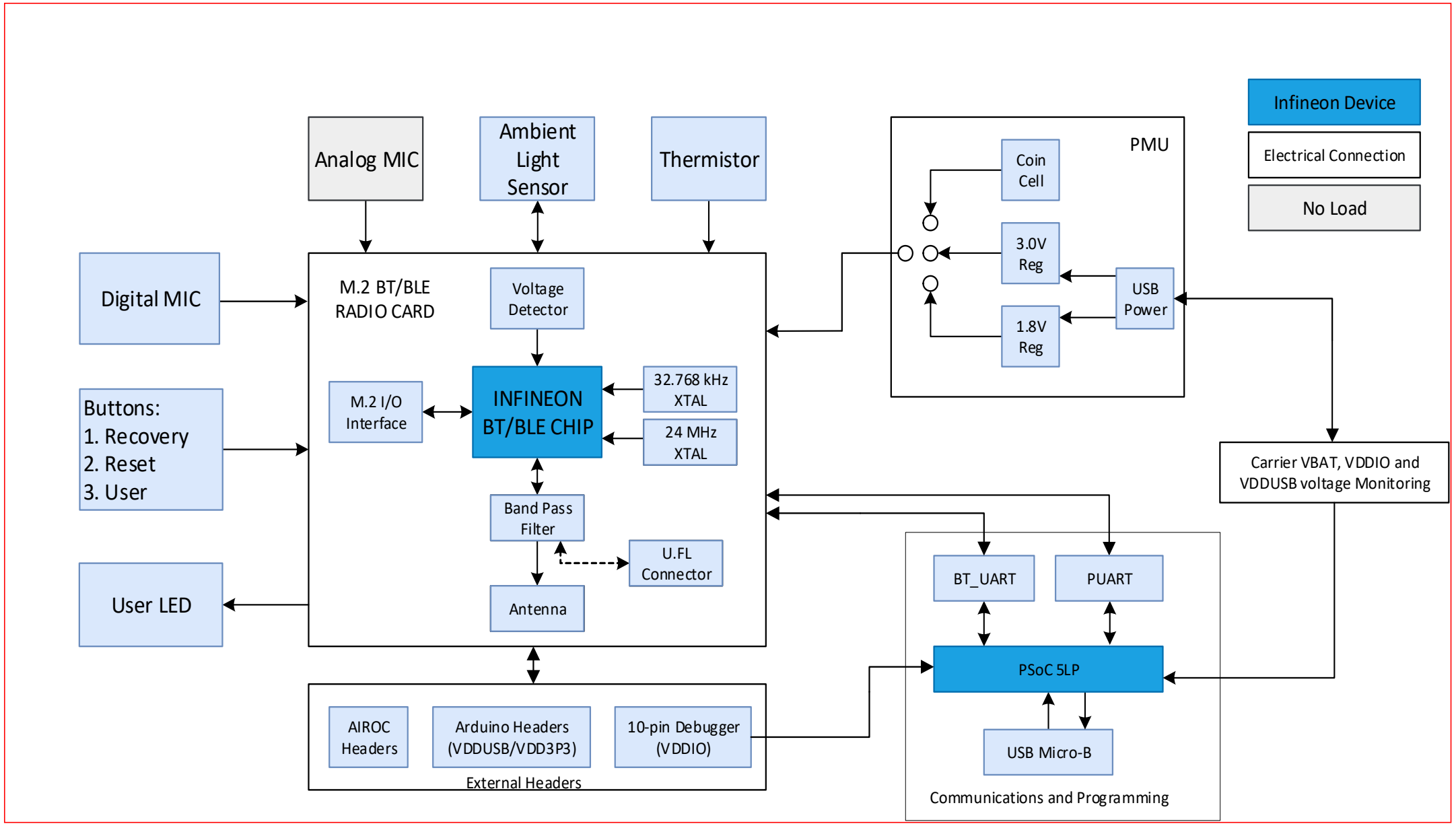



**Legal Disclaimer :**
The information given in this document shall in no event be regarded as a guarantee of conditions or characteristics. With respect to any examples or hints given herein, any typical values stated herein and/or any information regarding the application of the device, Infineon Technologies hereby disclaims any and all warranties and liabilities of any kind, including without limitation, warranties of non-infringement of intellectual property rights of any third party.


| | | | | |
|---|---|---|---|---|
| SCH Title : CYW9BTM2BASE2 | | | | |
| Page Title: Block Diagram | | | | |
| Size | Document Number | Drawn By | Approved By | Rev |
| A4 | 630-90706-01 | Michael Liu | Charles Leung | 2.0 |
| Date: Friday, July 15, 2022 | | | Sheet 2 of 11 | |

# Power Management Unit Block Diagram

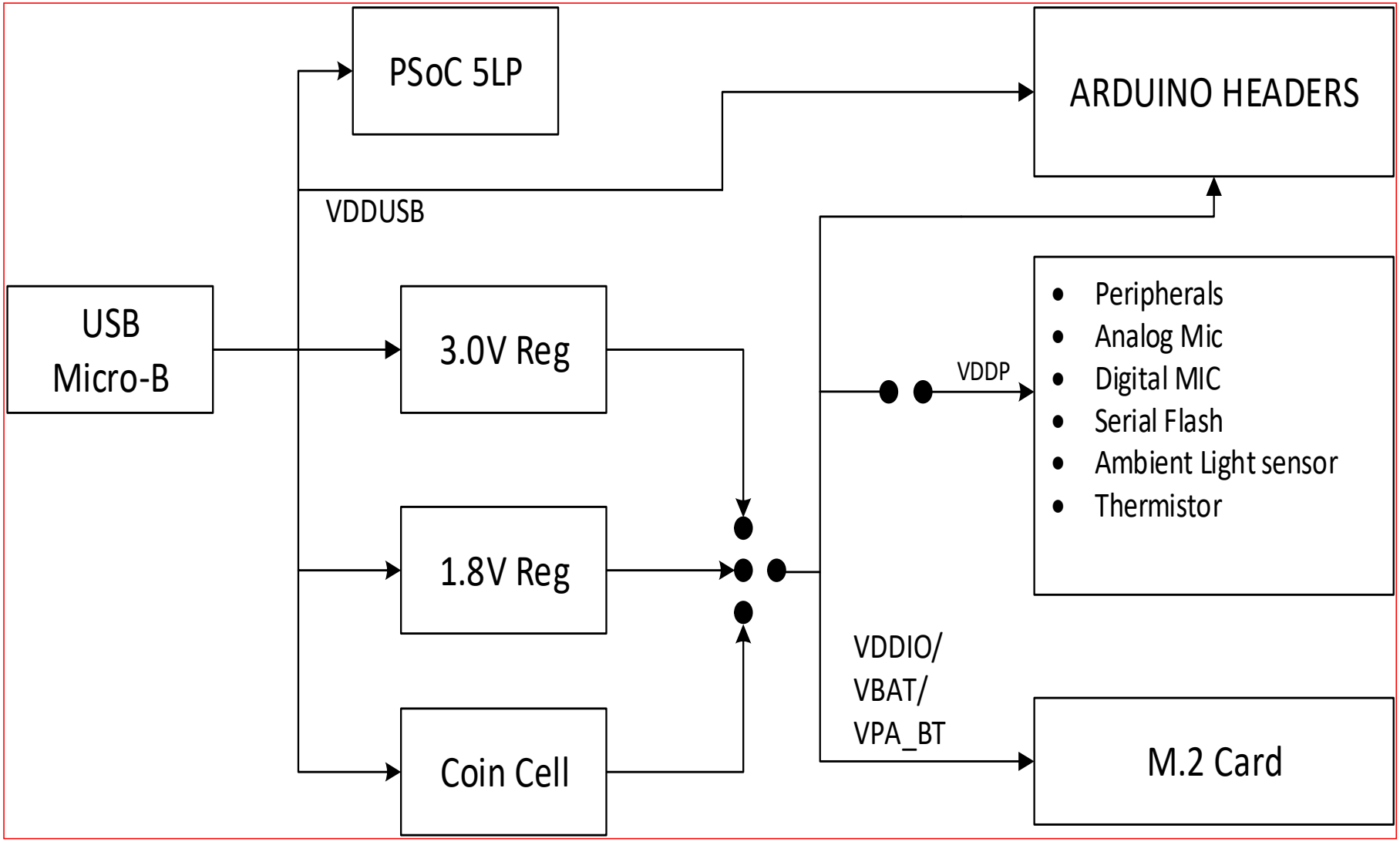


**Legal Disclaimer :**
The information given in this document shall in no event be regarded as a guarantee of conditions or characteristics. With respect to any examples or hints given herein, any typical values stated herein and/or any information regarding the application of the device, Infineon Technologies hereby disclaims any and all warranties and liabilities of any kind, including without limitation, warranties of non-infringement of intellectual property rights of any third party.

| | | | | |
|---|---|---|---|---|
| SCH Title : CYW9BTM2BASE2 | | | | |
| Page Title: PMU Block Diagram | | | | |
| Size | Document Number | Drawn By | Approved By | Rev |
| A4 | 630-90706-01 | Michael Liu | Charles Leung | 2.0 |
| Date: Tuesday, July 05, 2022 | | Sheet 3 of 11 | | |

M.2 socket, 2230-xx-E, MDT420E02001

J100 8038402-67G00E5T

## I2C Bus Pull-up

## Reset Button

## Recovery Button

## User Button

## Arduino RST Configuration

## Arduino Headers

**Legal Disclaimer :**
The information given in this document shall in no event be regarded as a guarantee of conditions or characteristics. With respect to any examples or hints given herein, any typical values stated herein and/or any information regarding the application of the device, Infineon Technologies hereby disclaims any and all warranties and liabilities of any kind, including without limitation, warranties of non-infringement of intellectual property rights of any third party.

| | | | | |
|---|---|---|---|---|
| SCH Title : CYW9BTM2BASE2 | | | | |
| Page Title: M.2 & Arduino Interface | | | | |
| Size | Document Number | Drawn By | Approved By | Rev |
| A4 | 630-90706-01 | Michael Liu | Charles Leung | 2.0 |
| Date: Tuesday, June 28, 2022 | | Sheet 4 of 11 | | |

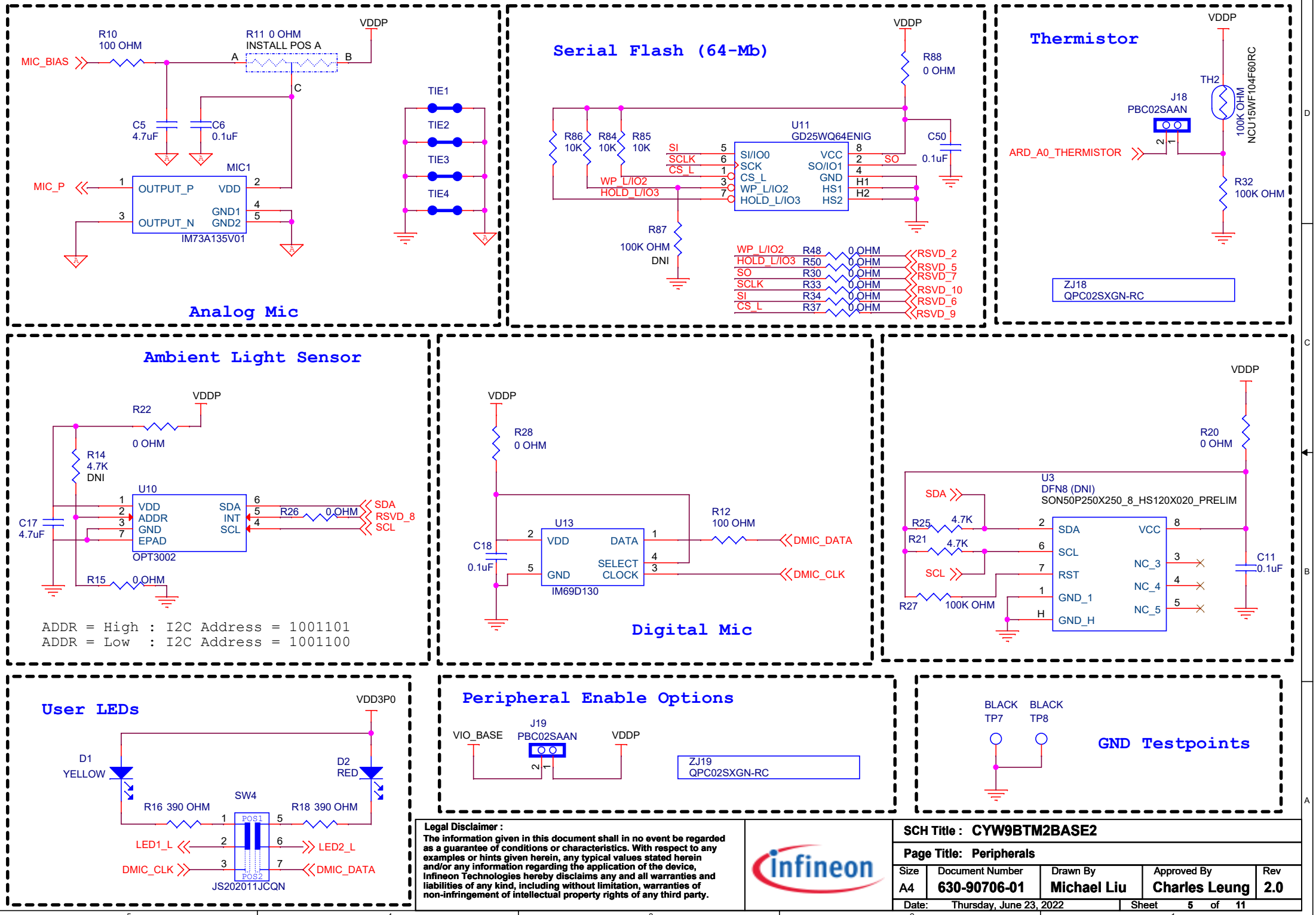


**Legal Disclaimer :**
**The information given in this document shall in no event be regarded as a guarantee of conditions or characteristics. With respect to any examples or hints given herein, any typical values stated herein and/or any information regarding the application of the device, Infineon Technologies hereby disclaims any and all warranties and liabilities of any kind, including without limitation, warranties of non-infringement of intellectual property rights of any third party.**

| | | | | |
|---|---|---|---|---|
| **SCH Title : CYW9BTM2BASE2** | | | | |
| **Page Title: Peripherals** | | | | |
| Size | Document Number | Drawn By | Approved By | Rev |
| A4 | **630-90706-01** | **Michael Liu** | **Charles Leung** | **2.0** |
| Date: | Thursday, June 23, 2022 | Sheet | **5** of **11** | |

## KitProg3 USB Connector

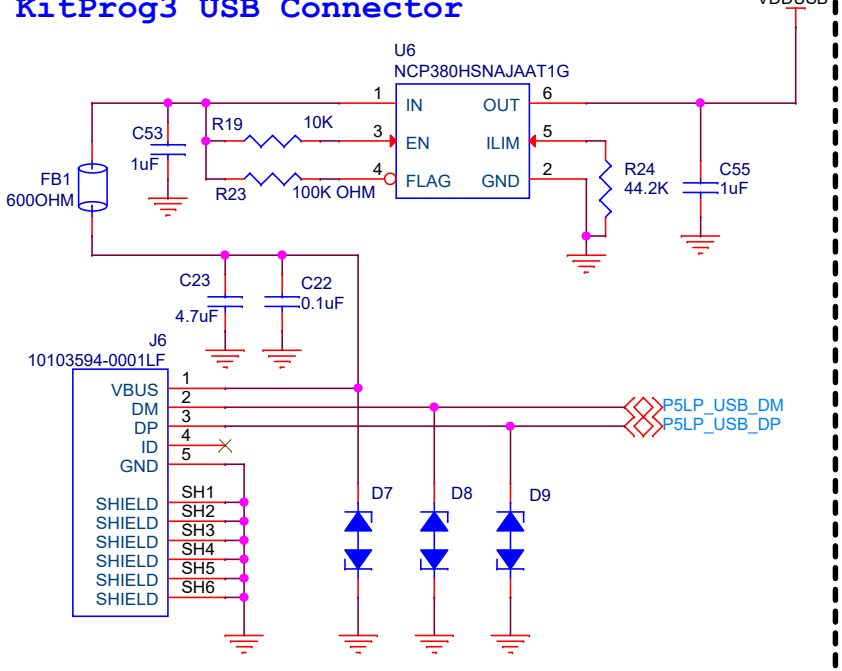


## 3.0V Voltage Regulator

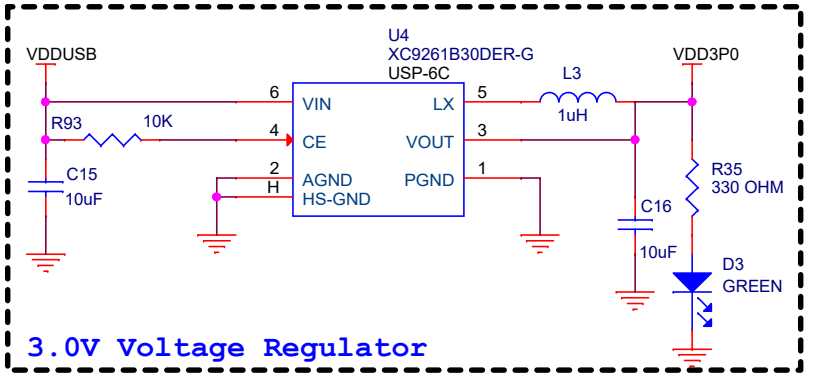


## 1.8V Voltage Regulator

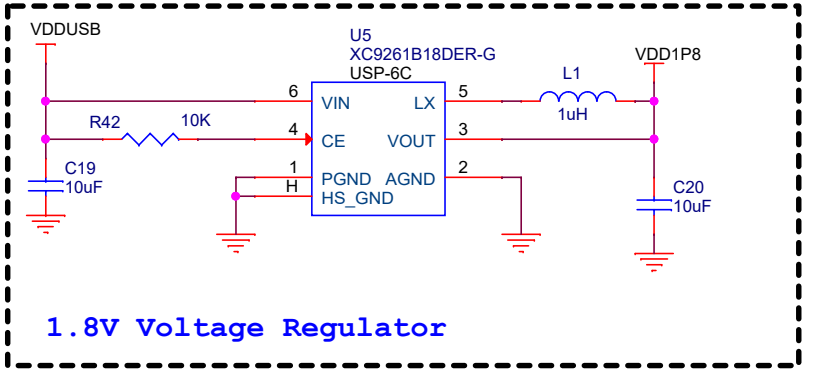


## VOLTAGE MONITORING

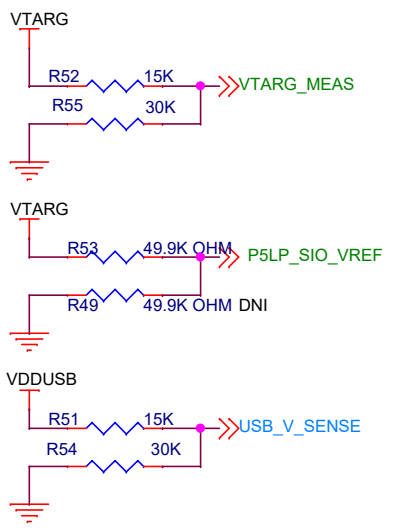


VIO_BASE Supply Options:
Short J7 Pos 2-3: Power VIO_BASE from VDD3P0
Short J7 Pos 3-4: Power VIO_BASE from VDD1P8
Short J7 Pos 1-3: Power VIO_BASE from Coin Cell

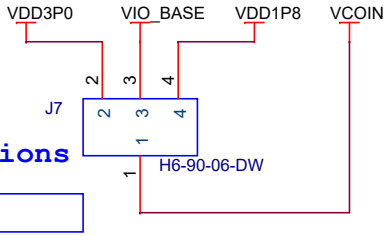


## VIO_BASE Options

ZJ7-2-3
QPC02SXGN-RC

VBAT Supply Options:
Short J8 Pos 2-3: Power VBAT from VDD3P0
Short J8 Pos 3-4: Power VBAT from VDD1P8
Short J8 Pos 1-3: Power VBAT from Coin Cell

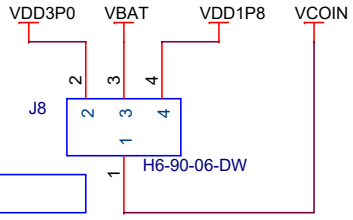


## VBAT Options

ZJ8-2-3
QPC02SXGN-RC

## Voltage Monitoring

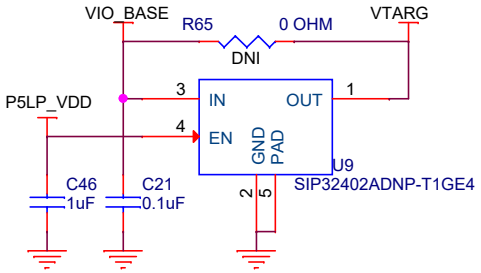


VPA_BT Supply Options:
Short J16 Pos 2-3: Power VPA_BT from VDD3P0
Short J16 Pos 3-4: Power VPA_BT from VDD1P8
Short J16 Pos 1-3: Power VPA_BT from Coin Cell
See kit user guide for list of supported operation modes.

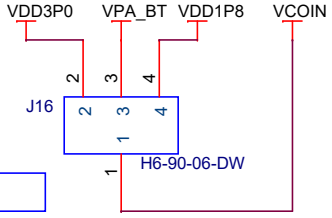


## VPA_BT Options

ZJ16-2-3
QPC02SXGN-RC

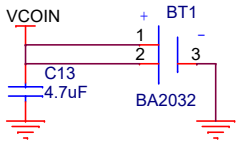


## CR2032 Coin Cell Holder

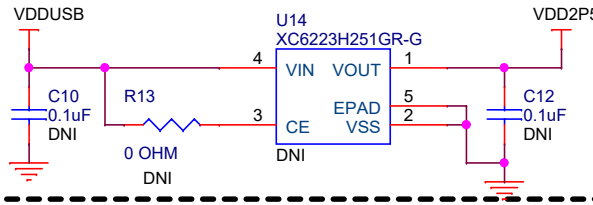


## 2.5V LDO

**Legal Disclaimer :**
**The information given in this document shall in no event be regarded as a guarantee of conditions or characteristics. With respect to any examples or hints given herein, any typical values stated herein and/or any information regarding the application of the device, Infineon Technologies hereby disclaims any and all warranties and liabilities of any kind, including without limitation, warranties of non-infringement of intellectual property rights of any third party.**

| | | | | |
|---|---|---|---|---|
| SCH Title : CYW9BTM2BASE2 | | | | |
| Page Title: USB Power | | | | |
| Size | Document Number | Drawn By | Approved By | Rev |
| A4 | 630-90706-01 | Michael Liu | Charles Leung | 2.0 |
| Date: Friday, July 15, 2022 | | Sheet 6 of 11 | | |

Digital Interface
User Interface
Power Management
Special Function

## PSoC 5LP based KitProg3

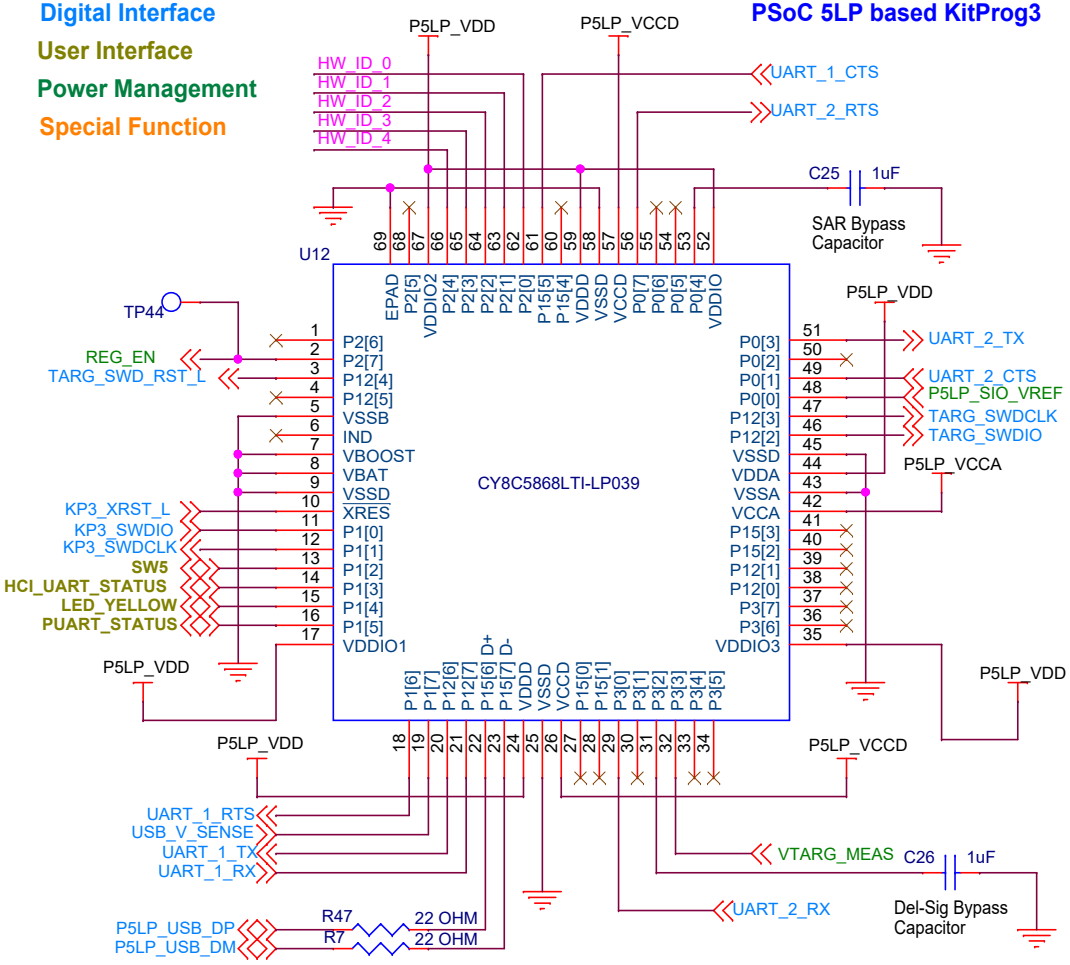


## KitProg3 Programming & Debug Interface Options

SW8 Options

Pos. 1:
- Use RSVD_3 and RSVD_4 as SWD

Pos. 2 (Default):
- Use ARD_D4 and ARD_D5 as SWD

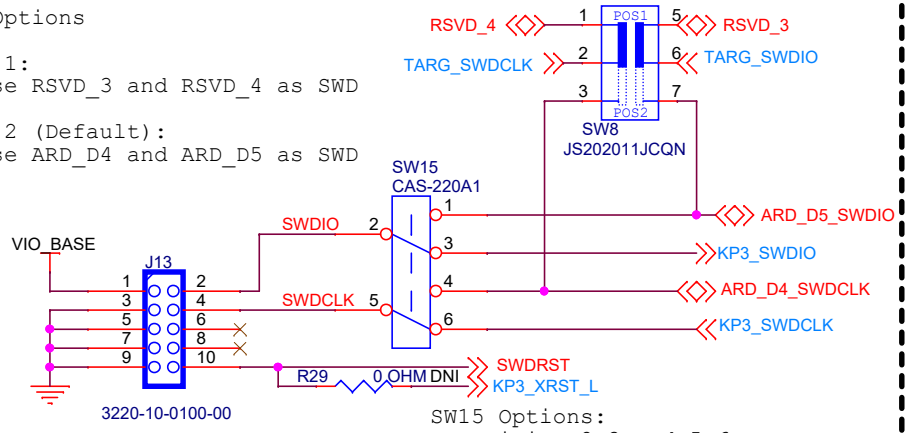


SW15 Options:
- Position 2-3 and 5-6:
  Debug Mode for BT
- Position 2-1 and 5-4 (Default):
  Programming Mode for KP3

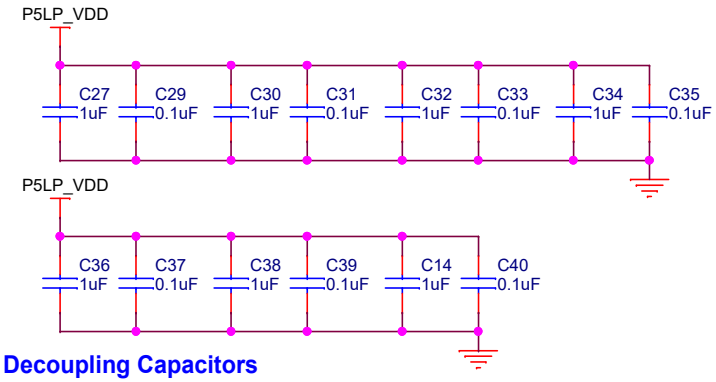


## Decoupling Capacitors

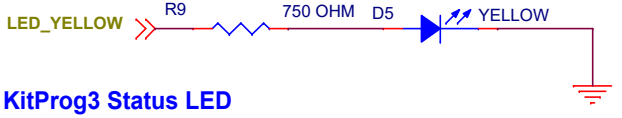


## KitProg3 Status LED

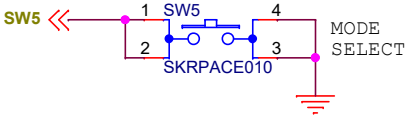


## PSoC 5LP Mode Select Switch

## KitProg3 Hardware Revision

ID = 0x0C

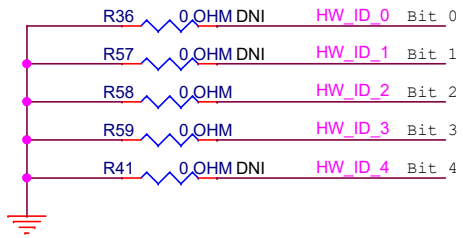


Note: GND is read as binary "1" and floating as "0"

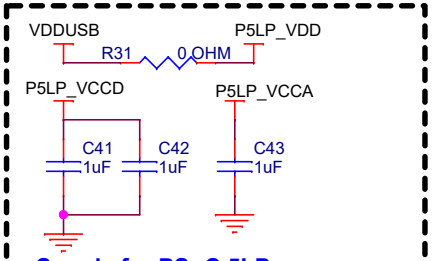


## Supply for PSoC 5LP


**Legal Disclaimer :**
**The information given in this document shall in no event be regarded as a guarantee of conditions or characteristics. With respect to any examples or hints given herein, any typical values stated herein and/or any information regarding the application of the device, Infineon Technologies hereby disclaims any and all warranties and liabilities of any kind, including without limitation, warranties of non-infringement of intellectual property rights of any third party.**


| | | | | |
|---|---|---|---|---|
| SCH Title : CYW9BTM2BASE2 | | | | |
| Page Title: PSoC 5LP | | | | |
| Size | Document Number | Drawn By | Approved By | Rev |
| A4 | 630-90706-01 | Michael Liu | Charles Leung | 2.0 |
| Date: | Thursday, June 23, 2022 | Sheet | 7 of 11 | |

## HCI UART Level Translator

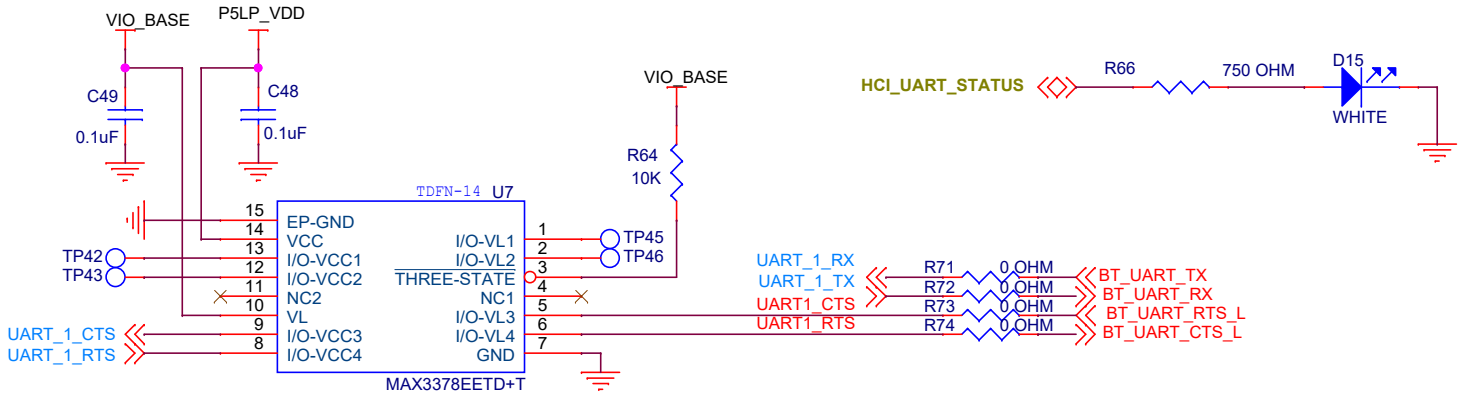


## PUART Level Translators

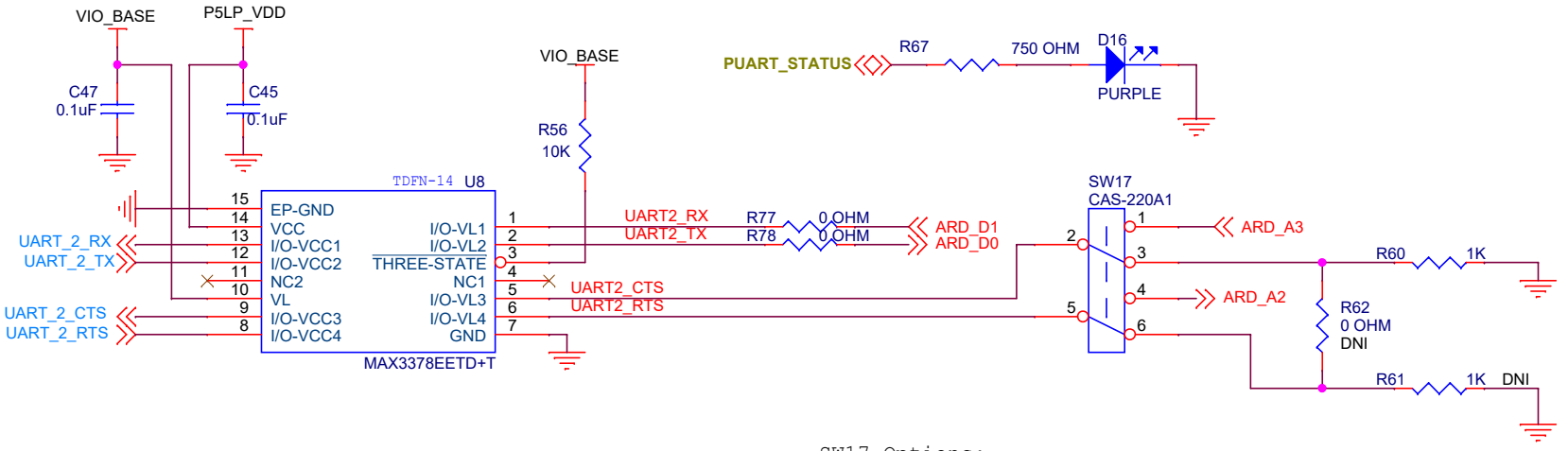


SW17 Options:
- Position 2-3 and 5-6 (Default): Disable PUART flow control
- Position 2-1 and 5-4: Enable PUART flow control

**Legal Disclaimer :**
The information given in this document shall in no event be regarded as a guarantee of conditions or characteristics. With respect to any examples or hints given herein, any typical values stated herein and/or any information regarding the application of the device, Infineon Technologies hereby disclaims any and all warranties and liabilities of any kind, including without limitation, warranties of non-infringement of intellectual property rights of any third party.

| | | | | |
|---|---|---|---|---|
| SCH Title : CYW9BTM2BASE2 | | | | |
| Page Title: HCI UART and PUART Level Translators | | | | |
| Size | Document Number | Drawn By | Approved By | Rev |
| A4 | 630-90706-01 | Michael Liu | Charles Leung | 2.0 |
| Date: Tuesday, July 05, 2022 | | Sheet 8 of 11 | | |

## BT-USB Connector

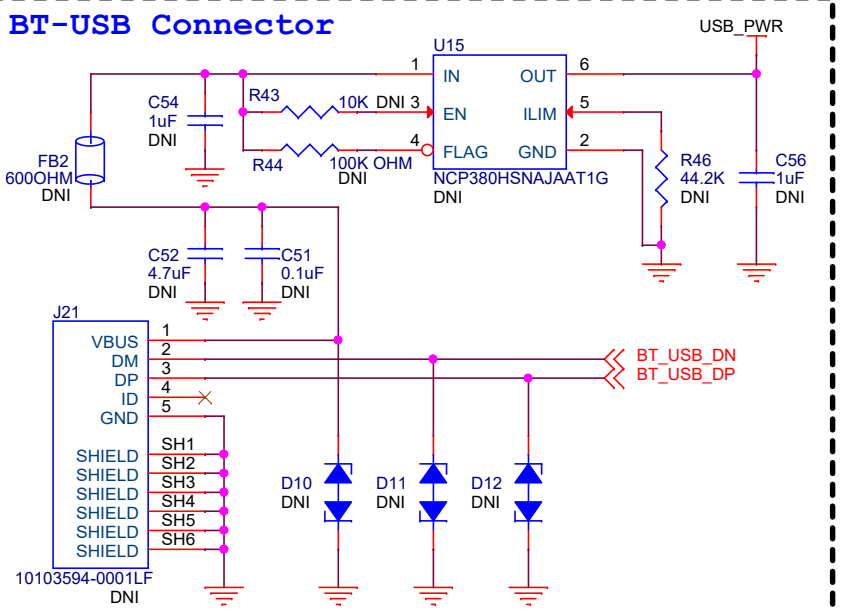


## Rubber Feet Stand-offs

MT1
SJ61A4

MT2
SJ61A4

MT3
SJ61A4

MT4
SJ61A4

## USB CABLE

CBL1
750-90043-01

## AIROC HEADERS

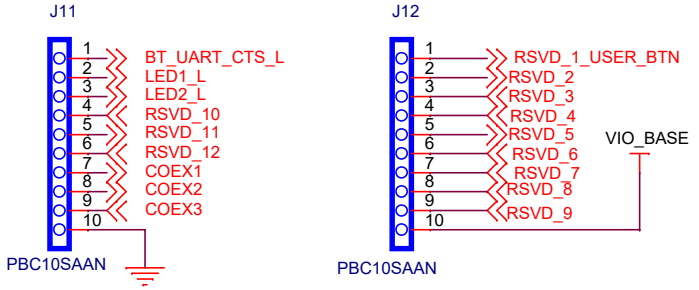


M1
S001-00001-A42-R
MT1
Standoff for M.2 Card

ZH1
S001-00003
M.2 standoff screw

## M.2 Connector Accessories

ACC6
298 SV001

## USB CONNECTOR BRACKET


**Legal Disclaimer :**
The information given in this document shall in no event be regarded as a guarantee of conditions or characteristics. With respect to any examples or hints given herein, any typical values stated herein and/or any information regarding the application of the device, Infineon Technologies hereby disclaims any and all warranties and liabilities of any kind, including without limitation, warranties of non-infringement of intellectual property rights of any third party.


| | | | | |
|---|---|---|---|---|
| SCH Title : CYW9BTM2BASE2 | | | | |
| Page Title: BT USB Connector, AIROC Headers and Accessories | | | | |
| Size | Document Number | Drawn By | Approved By | Rev |
| A4 | 630-90706-01 | Michael Liu | Charles Leung | 2.0 |
| Date: Friday, July 15, 2022 | | | Sheet 9 of 11 | |

| Arduino I/F: | 208xx GPIOs: | Shared Functions: |
|---|---|---|
| A0 | Pxx | Thermistor ADC |
| A1 | Pxx | |
| A2 | Pxx | PUART_CTS_L |
| A3 | Pxx | PUART_RTS_L |
| A4 | Pxx | |
| A5 | Pxx | |
| D0 | Pxx | PUART_RX |
| D1 | Pxx | PUART_TX |
| D2 | Pxx | |
| D3 | Pxx | |
| D4 | Pxx | SWDCLK |
| D5 | Pxx | SWDIO |
| D6 | Pxx | |
| D7 | Pxx | |
| D8 | Pxx | |
| D9 | Pxx | |
| D10 | Pxx | |
| D11 | Pxx | |
| D12 | Pxx | |
| D13 | Pxx | |
| SDA | Pxx | |
| SCL | Pxx | |
| | | |

| Peripherals: | 208xx GPIOs: | Shared Functions: |
|---|---|---|
| LED1 | Pxx | DMIC_CLK |
| LED2 | Pxx | DMIC_DATA |
| RSVD_1 | Pxx | USER BTN / H2 Autobaud BTN |
| RSVD_2 | Pxx | WP_L/IO2 |
| RSVD_3 | Pxx | SWDIO_ALT |
| RSVD_4 | Pxx | SWDCK_ALT |
| RSVD_5 | Pxx | HOLD_L/IO3 |
| RSVD_6 | Pxx | SF_MOSI |
| RSVD_7 | Pxx | SF_MISO |
| RSVD_8 | Pxx | AMBIENT LIGHT SENSOR INT |
| RSVD_9 | Pxx | SF_CS_L |
| RSVD_10 | Pxx | SF_SCLK |
| RSVD_11 | Pxx | |
| RSVD_12 | Pxx | |

**Legal Disclaimer :**
**The information given in this document shall in no event be regarded as a guarantee of conditions or characteristics. With respect to any examples or hints given herein, any typical values stated herein and/or any information regarding the application of the device, Infineon Technologies hereby disclaims any and all warranties and liabilities of any kind, including without limitation, warranties of non-infringement of intellectual property rights of any third party.**

**SCH Title :** CYW9BTM2BASE1

**Page Title:** GPIOs Mapping and Configuration

| Size | Document Number | Drawn By | Approved By | Rev |
|---|---|---|---|---|
| A4 | 630-90706-01 | Michael Liu | Charles Leung | 2.0 |

Date: Tuesday, July 05, 2022 Sheet 10 of 11

# REVISION HISTORY

| REV | DESCRIPTION OF CHANGE | Orig. of Change | DATE |
|---|---|---|---|
| 1.0 | Initial Release, based on CYW9BTM2BASE1 REV4.0 with U4 changed to a 3.0V regulator. | Michael Liu | 02/26/2020 |
| 2.0 | Update based on CYW9BTM2BASE1 REV6.0 with U4 changed to a 3.0V regulator. | Michael Liu | 06/22/2022 |
| | | | |
| | | | |
| | | | |
| | | | |
| | | | |
| | | | |
| | | | |
| | | | |
| | | | |
| | | | |
| | | | |
| | | | |

**Legal Disclaimer :**
The information given in this document shall in no event be regarded as a guarantee of conditions or characteristics. With respect to any examples or hints given herein, any typical values stated herein and/or any information regarding the application of the device, Infineon Technologies hereby disclaims any and all warranties and liabilities of any kind, including without limitation, warranties of non-infringement of intellectual property rights of any third party.

SCH Title : CYW9BTM2BASE2

Page Title: Revision History

| Size | Document Number | Drawn By | Approved By | Rev |
|---|---|---|---|---|
| A4 | 630-90706-01 | Michael Liu | Charles Leung | 2.0 |

Date: Thursday, June 23, 2022 Sheet 11 of 11